Article datasheet

Threaded Block 12x5x5 | 3x M2.5 Nickel-Plated Brass

Article-No.: 005.60.422

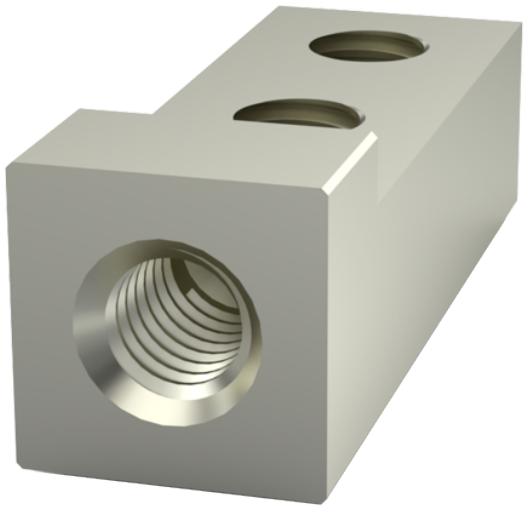

Image may be similar

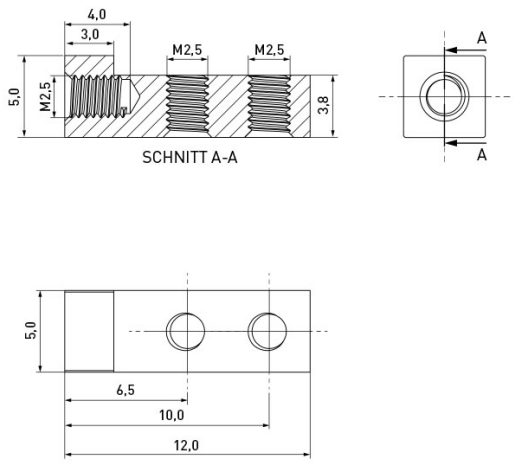

Finish:	Nickel-Plated, 3 µm, E1E
Length [mm]:	12
Material:	Brass
Thread 1 / Hole 1:	M2.5
Thread 1 Length [mm]:	4
Thread 2 / Hole 2:	M2.5
Thread 2 Length [mm]:	3.8
Thread 3 / Hole 3:	M2.5
Thread 3 Length [mm]:	3.8
Weight:	1.6g

Conformities

RoHS compliant:	Yes
Application of RoHS Annex III exemptions:	Yes
REACH compliant:	Yes
SVHC free:	No
SVHC substances:	Listed substance): Lead - CAS-No. 7439-92-1

Note: Information on SVHC substances specific to your individual deliveries can be found on your respective delivery note.

You can find all information on the web on our article detail page
Threaded Block 12x5x5 | 3x M2.5 Nickel-Plated Brass

Would you like individual advice?
We look forward to your email to products@ettinger.de.

Subject to change and errors.

ETTINGER GmbH

Ottostraße 5 | 85649 Hofolding | Deutschland | www.ettinger.de | info@ettinger.de | + 49 8104 66 23 88