Article datasheet

SEMS Screw ISO7045 PZ Z7 M3x5 ZN Plated Steel 4.8 Serrated Lock Washer

Article-No.: 081.58.313

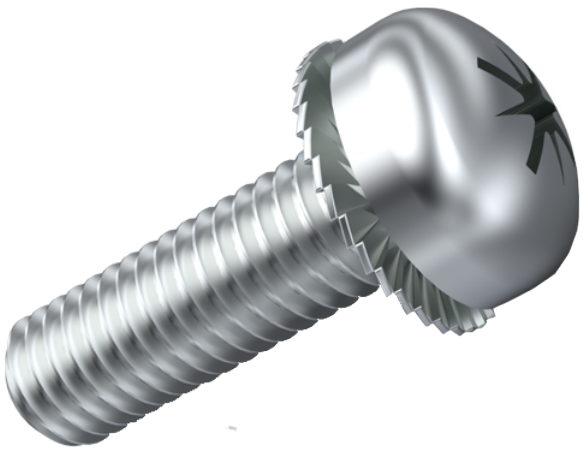

Image may be similar

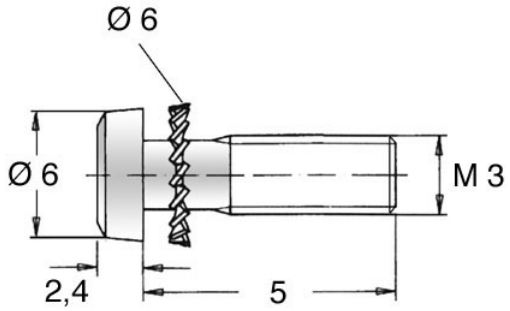

Actuator Size:	Pozidriv PZ1
Combination:	Serrated Lock Washer DIN6907
DIN/ISO:	ISO7045
Drive Type:	Cross Recess / Pozidriv-Z
Finish:	Zinc Plated, 5 µm, A2K
Head Diameter [mm]:	6
Head Height [mm]:	2.4
Head Shape:	Pan Head
Length [mm]:	5
Material:	Steel 4.8, lead-free
Thread Size:	M3
Weight:	0.67g

Conformities

RoHS compliant:	Yes
REACH compliant:	Yes
SVHC free:	Yes

Note: Information on SVHC substances specific to your individual deliveries can be found on your respective delivery note.

You can find all information on the web on our article detail page
SEMS Screw ISO7045 PZ Z7 M3x5 ZN Plated Steel 4.8 Serrated Lock Washer

Would you like individual advice?
We look forward to your email to products@ettinger.de.

Subject to change and errors.

ETTINGER GmbH
Ottostraße 5 | 85649 Hofolding | Deutschland | www.ettinger.de | info@ettinger.de | + 49 8104 66 23 88