Article datasheet

# Insulation sleeve ø3.2/4.4/6.3x1.9 Polyamid 4.6 black/-40°C/+163°C

**Article-No.: 070.83.235**

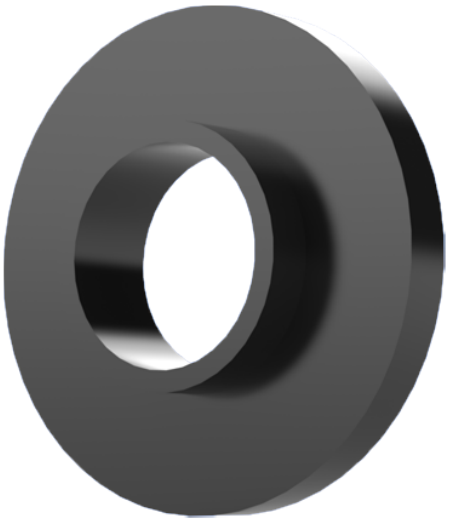

**Image may be similar**

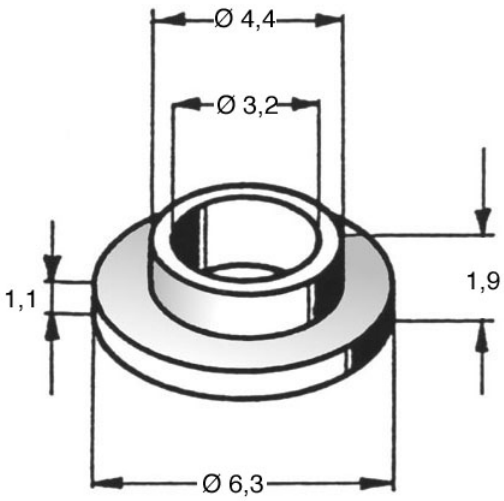


| | |
|---|---|
| Color: | Black |
| Flammability Class: | UL94-V0 |
| Height [mm]: | 1.9 |
| Inner Diameter [mm]: | 3.2 |
| Lug Diameter [mm]: | 4.4 |
| Material: | PA 4.6 GF |
| Model: | With Low Lug |
| Outer Diameter [mm]: | 6.3 |
| Weight: | 0.05g |

**Conformities**

| | |
|---|---|
| RoHS compliant: | Yes |
| REACH compliant: | Yes |
| SVHC free: | Yes |

**Note:** Information on SVHC substances specific to your individual deliveries can be found on your respective delivery note.

**You can find all information on the web on our article detail page**
**Insulation sleeve ø3.2/4.4/6.3x1.9 Polyamid 4.6 black/-40°C/+163°C**

**Would you like individual advice?**
**We look forward to your email to products@ettinger.de.**

**Subject to change and errors.**

**ETTINGER GmbH**
Ottostraße 5 | 85649 Hofolding | Deutschland | www.ettinger.de | info@ettinger.de | + 49 8104 66 23 88