Article datasheet

Bearing ø12/18x14mm Polyamid 6 natural

Article-No.: 005.98.128

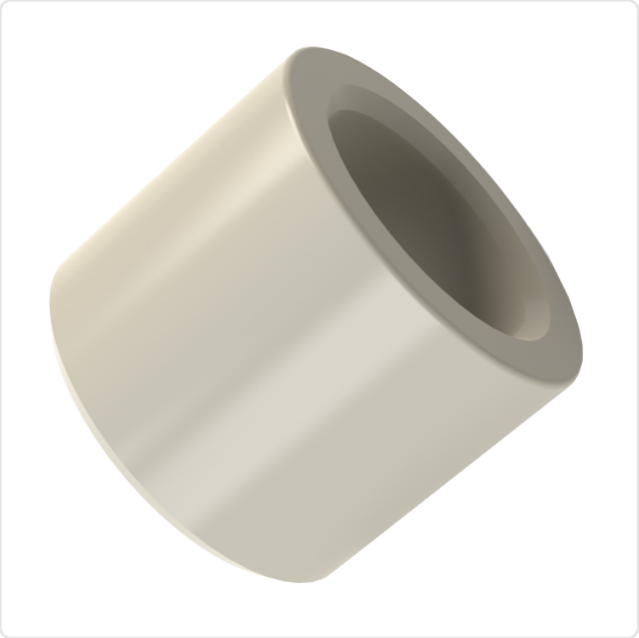

Image may be similar

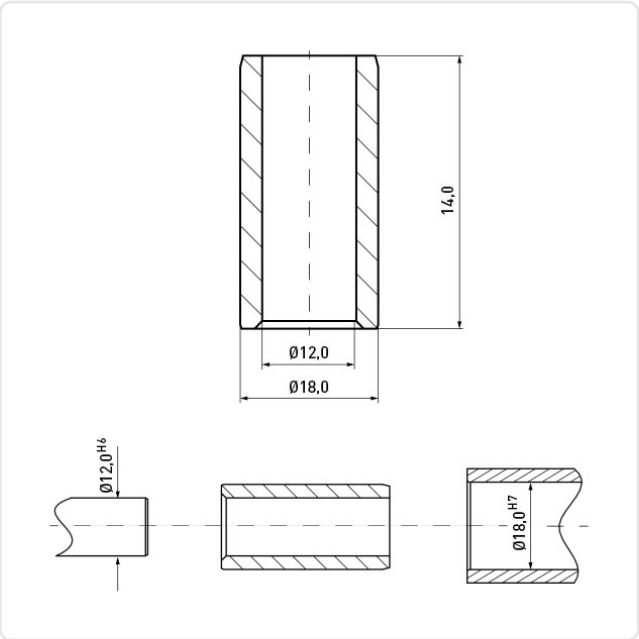

Color:	Natural
Flammability Class:	UL94-V2
Inner Diameter [mm]:	12
Length [mm]:	14
Material:	PA 6.0
Model:	Without Lug
Outer Diameter [mm]:	18
Weight:	2.24g

Conformities

RoHS compliant:	Yes
REACH compliant:	Yes
SVHC free:	Yes

Note: Information on SVHC substances specific to your individual deliveries can be found on your respective delivery note.

You can find all information on the web on our article detail page
Bearing ø12/18x14mm Polyamid 6 natural

Would you like individual advice?
We look forward to your email to products@ettinger.de.

Subject to change and errors.

ETTINGER GmbH

Ottostraße 5 | 85649 Hofolding | Deutschland | www.ettinger.de | info@ettinger.de | + 49 8104 66 23 88