Article datasheet

# Thread Forming Screw DIN7500C M4x16 Zinc Plated Steel Case Hard. PZ Pan Head

**Article-No.: 001.38.461**

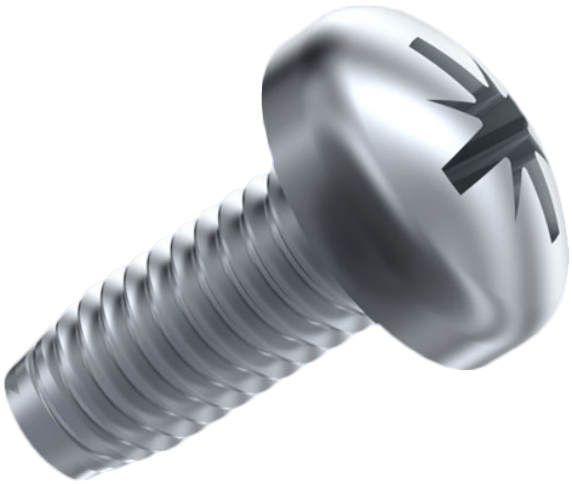

**Image may be similar**

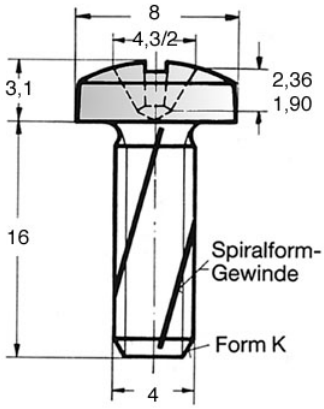


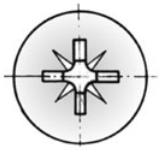

| | |
|---|---|
| Actuator Size: | Pozidriv PZ2 |
| DIN/ISO: | DIN7500-C |
| Drive Type: | Cross Recess / Pozidriv-Z |
| Finish: | Zinc Plated, 5 µm, A2K |
| Head Diameter [mm]: | 8 |
| Head Height [mm]: | 3.1 |
| Head Shape: | Pan Head |
| Length [mm]: | 16 |
| Material: | Case-Hardened Steel, lead-free |
| Thread Size: | M4 |
| Thread Type: | Metric |
| Weight: | 2g |

**Conformities**

| | |
|---|---|
| RoHS compliant: | Yes |
| REACH compliant: | Yes |
| SVHC free: | Yes |

**Note:** Information on SVHC substances specific to your individual deliveries can be found on your respective delivery note.

**You can find all information on the web on our article detail page**
**Thread Forming Screw DIN7500C M4x16 Zinc Plated Steel Case Hard. PZ Pan Head**

**Would you like individual advice?**
**We look forward to your email to products@ettinger.de.**

**Subject to change and errors.**

**ETTINGER GmbH**
Ottostraße 5 | 85649 Hofolding | Deutschland | www.ettinger.de | info@ettinger.de | + 49 8104 66 23 88