Article datasheet

Drive Rivet Ø4.7 | 1.5-5.0 Polyamide 6.6 natural

Article-No.: 072.13.551



Image may be similar

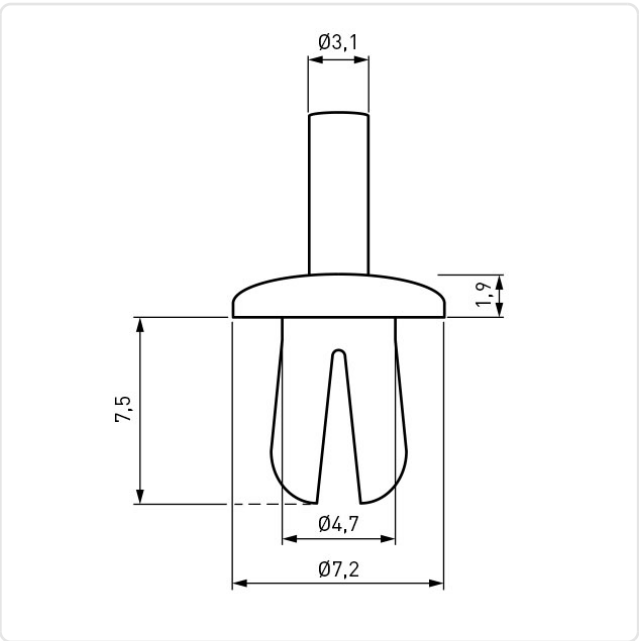

Color:	Natural
Flammability Class:	UL94-V2
Head Diameter [mm]:	7.2
Head Height [mm]:	1.9
Length [mm]:	7.5
Mandrel Diameter [mm]:	3.1
Material:	PA 6.6
Model:	not removable
Mounting Hole Range [mm]:	4.8-5.0
Panel Thickness [mm]:	1,5-5,0
Rivet Diameter [mm]:	4.7
Weight:	0.18g

Conformities

SVHC free:	Yes

Note: Information on SVHC substances specific to your individual deliveries can be found on your respective delivery note.

You can find all information on the web on our article detail page
Drive Rivet Ø4.7 | 1.5-5.0 Polyamide 6.6 natural

Would you like individual advice?
We look forward to your email to products@ettinger.de.

Subject to change and errors.

ETTINGER GmbH

Ottostraße 5 | 85649 Hofolding | Deutschland | www.ettinger.de | info@ettinger.de | + 49 8104 66 23 88