Article datasheet

Thread Forming Screw DIN7500C M3x6 Zinc Plated Steel Case Hard. PZ Pan Head

Article-No.: 001.38.321

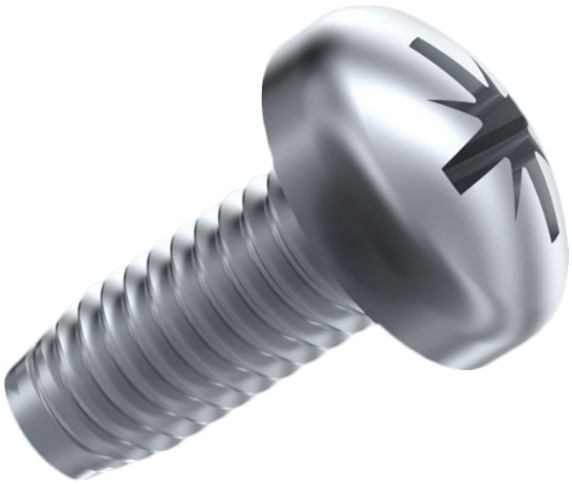

Image may be similar

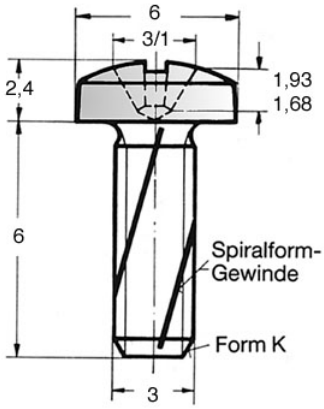

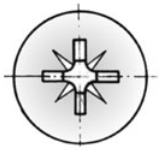

Actuator Size:	Pozidriv PZ1
DIN/ISO:	DIN7500-C
Drive Type:	Cross Recess / Pozidriv-Z
Finish:	Zinc Plated, 5 µm, A2K
Head Diameter [mm]:	6
Head Height [mm]:	2.4
Head Shape:	Pan Head
Length [mm]:	6
Material:	Case-Hardened Steel, lead-free
Thread Size:	M3
Thread Type:	Metric
Weight:	0.62g

Conformities

RoHS compliant:	Yes
REACH compliant:	Yes
SVHC free:	Yes

Note: Information on SVHC substances specific to your individual deliveries can be found on your respective delivery note.

You can find all information on the web on our article detail page
Thread Forming Screw DIN7500C M3x6 Zinc Plated Steel Case Hard. PZ Pan Head

Would you like individual advice?
We look forward to your email to products@ettinger.de.

Subject to change and errors.

ETTINGER GmbH
Ottostraße 5 | 85649 Hofolding | Deutschland | www.ettinger.de | info@ettinger.de | + 49 8104 66 23 88