Article datasheet

Contact Washer Ø2.7/6.0x0.5 Alkal. ZN Plated Spring ST

Article-No.: 003.20.024

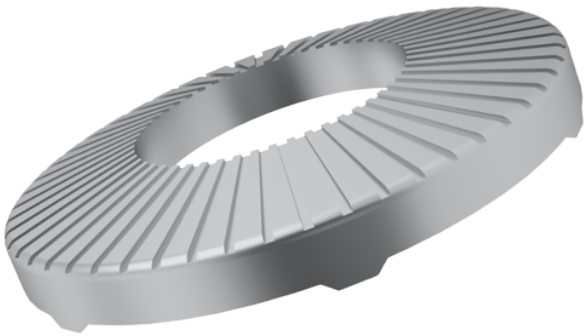

Image may be similar

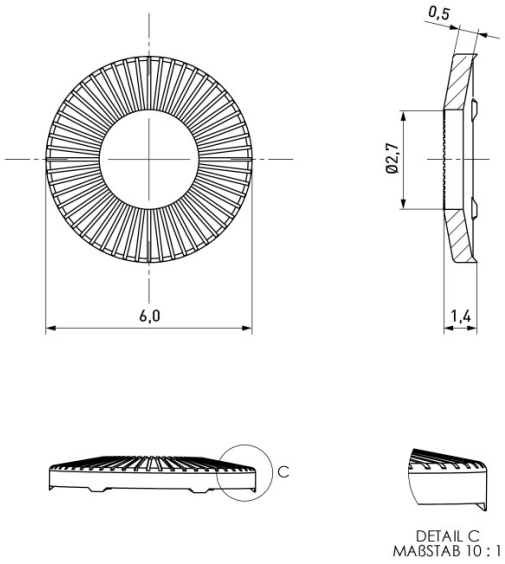

Finish:	Alkaline Zinc Plated 8 µm
For Thread Size:	M2.5
Height [mm]:	0.5
Inner Diameter [mm]:	2.7
Material:	Spring Steel, lead-free
Outer Diameter [mm]:	6
Weight:	0.08g

Conformities

RoHS compliant:	Yes
REACH compliant:	Yes
SVHC free:	Yes

Note: Information on SVHC substances specific to your individual deliveries can be found on your respective delivery note.

You can find all information on the web on our article detail page
Contact Washer Ø2.7/6.0x0.5 Alkal. ZN Plated Spring ST

Would you like individual advice?
We look forward to your email to products@ettinger.de.

Subject to change and errors.

ETTINGER GmbH

Ottostraße 5 | 85649 Hofolding | Deutschland | www.ettinger.de | info@ettinger.de | + 49 8104 66 23 88