Article datasheet

Knurled Thumb Screw M5x30 Polyamide 6.6 natural Vertical Knurl

Article-No.: 001.49.3150



Image may be similar

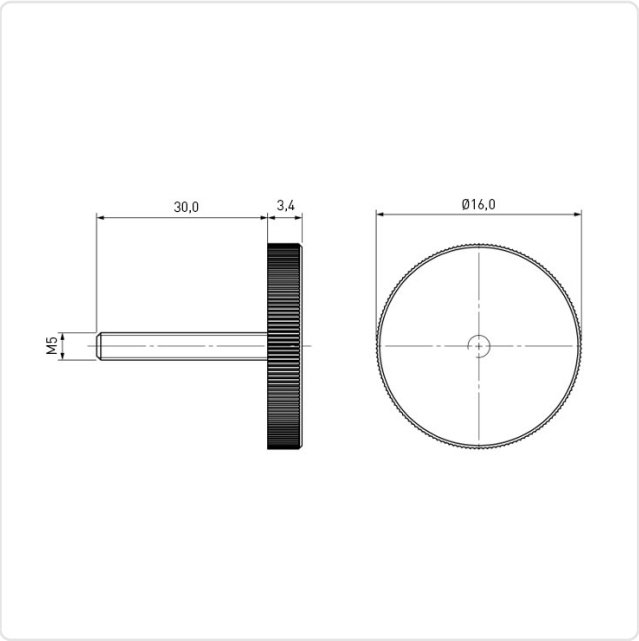

Color:	Natural
Head Diameter [mm]:	16
Head Height [mm]:	3.4
Head Shape:	Cheese Head
Knurling:	Vertical Knurl
Length [mm]:	30
Material:	PA 6.6
Thread Size:	M5
Weight:	1.21g

Conformities

RoHS compliant:	Yes
REACH compliant:	Yes
SVHC free:	Yes

Note: Information on SVHC substances specific to your individual deliveries can be found on your respective delivery note.

You can find all information on the web on our article detail page
Knurled Thumb Screw M5x30 Polyamide 6.6 natural Vertical Knurl

Would you like individual advice?
We look forward to your email to products@ettinger.de.

Subject to change and errors.

ETTINGER GmbH

Ottostraße 5 | 85649 Hofolding | Deutschland | www.ettinger.de | info@ettinger.de | + 49 8104 66 23 88