ETTINGER
Elektronik-Bauelemente

Article datasheet

Collapsible handle 120x91mm/108mm Aluminium,silver/Holes ø4.5mm

Article-No.: 029.43.358

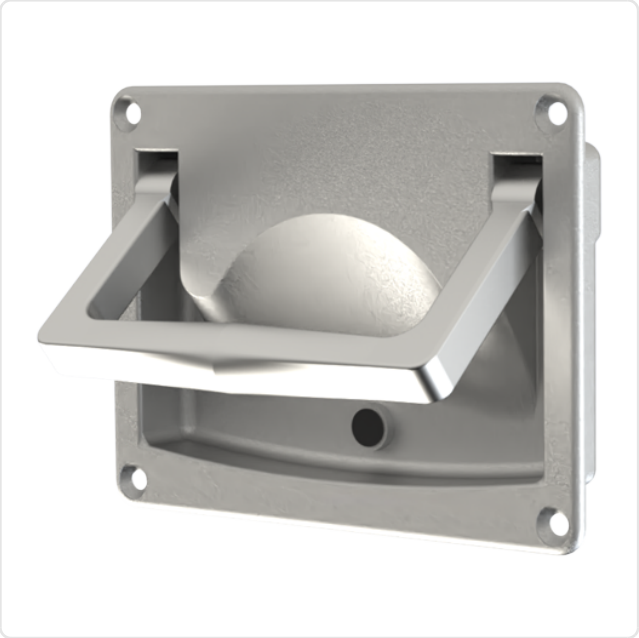

Image may be similar

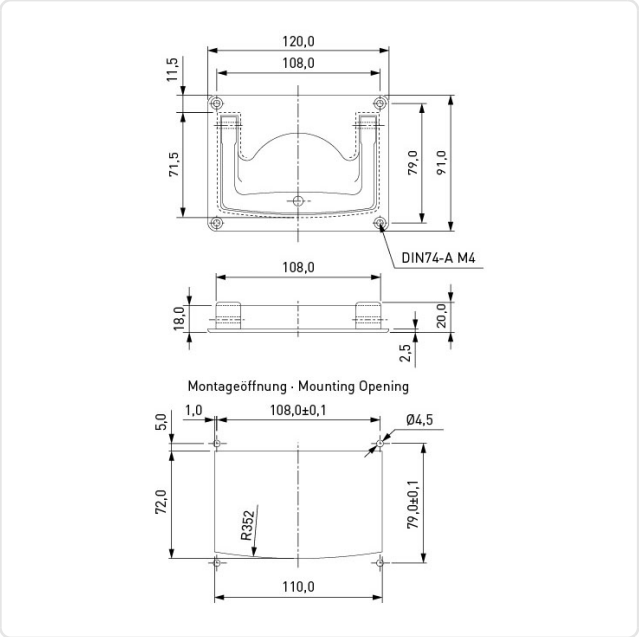

Dist. Mounting Holes [mm]:	108
Height [mm]:	91
Material:	Aluminum ENAW-6060 / AlMgSi, lead-free
Material Group:	Aluminum
Model:	Collapsible Handle
Width [mm]:	120
Weight:	159g
Conformities:	Reach COMPLIANT, RoHS COMPLIANT, SVHC COMPLIANT

You can find all information on the web on our article detail page

Would you like individual advice?
We look forward to your email to products@ettinger.de.

Subject to change and errors.

ETTINGER GmbH

Ottostraße 5 | 85649 Hofolding | Deutschland | www.ettinger.de | info@ettinger.de | + 49 8104 66 23 88