Article datasheet

Light Pipe 90° for SMD LEDs Polycarbonateclear

Article-No.: 063.68.300

Manufacturer: BIVAR

Manufacturer article-no.: SLP-1-3

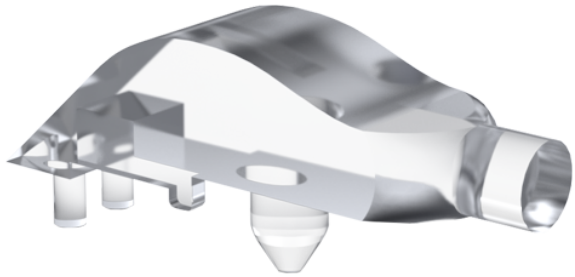

Image may be similar

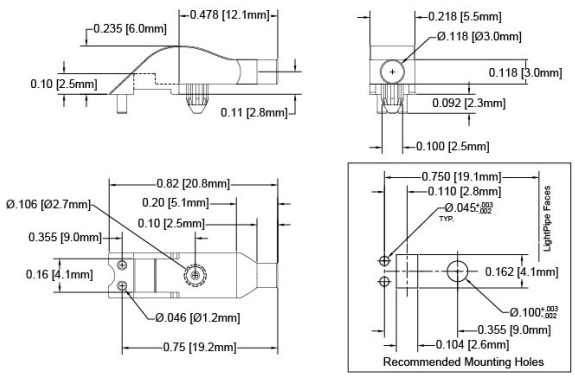

Color:	Transparent
Material:	PC - Polycarbonate
Model:	Round Lens ø 3 mm
Weight:	0.42g

Conformities

RoHS compliant:	Yes
REACH compliant:	Yes
SVHC free:	Yes

Note: Information on SVHC substances specific to your individual deliveries can be found on your respective delivery note.

You can find all information on the web on our article detail page
Light Pipe 90° for SMD LEDs Polycarbonateclear

Would you like individual advice?
We look forward to your email to products@ettinger.de.

Subject to change and errors.

ETTINGER GmbH

Ottostraße 5 | 85649 Hofolding | Deutschland | www.ettinger.de | info@ettinger.de | + 49 8104 66 23 88