Article datasheet

Countersunk Screw ISO14581 M2.5x5 Zinc Plated Steel 4.8 Torx

Article-No.: 001.55.211



Image may be similar

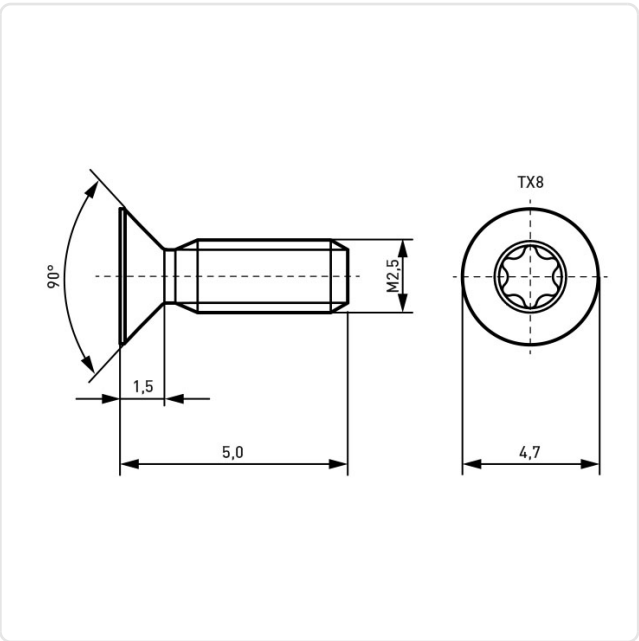

Actuator Size:	Torx T8
DIN/ISO:	ISO14581
Drive Type:	TORX
Finish:	Zinc Plated, 5 µm, A2K
Head Diameter [mm]:	4.7
Head Height [mm]:	1.5
Head Shape:	Countersunk Head
Length [mm]:	5
Material:	Steel 4.8, lead-free
Thread Size:	M2.5
Weight:	0.2g

Conformities

RoHS compliant:	Yes
REACH compliant:	Yes
SVHC free:	Yes

Note: Information on SVHC substances specific to your individual deliveries can be found on your respective delivery note.

You can find all information on the web on our article detail page [Countersunk Screw ISO14581 M2.5x5 Zinc Plated Steel 4.8 Torx]

Would you like individual advice?
We look forward to your email to products@ettinger.de.

Subject to change and errors.

ETTINGER GmbH

Ottostraße 5 | 85649 Hofolding | Deutschland | www.ettinger.de | info@ettinger.de | + 49 8104 66 23 88