Article datasheet

Set Screw DIN551/ISO4766 M6x6 PA-66 Natural Slotted Flat Point

Article-No.: 001.40.626



Image may be similar

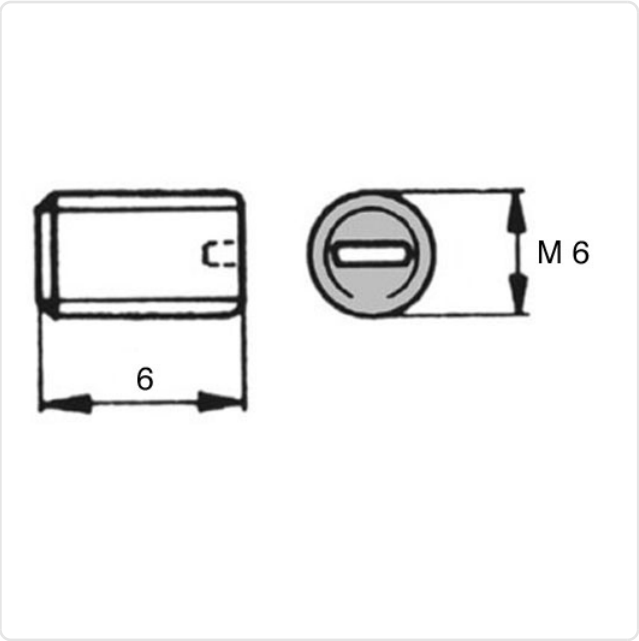

Color:	Natural
DIN/ISO:	ISO4766
Drive Type:	Slotted
Flammability Class:	UL94-V2
Length [mm]:	6
Material:	PA 6.6
Point Type:	Flat Point
Thread Size:	M6
Weight:	0.15g

Conformities

RoHS compliant:	Yes
REACH compliant:	Yes
SVHC free:	Yes

Note: Information on SVHC substances specific to your individual deliveries can be found on your respective delivery note.

You can find all information on the web on our article detail page
Set Screw DIN551/ISO4766 M6x6 PA-66 Natural Slotted Flat Point

Would you like individual advice?
We look forward to your email to products@ettinger.de.

Subject to change and errors.

ETTINGER GmbH
Ottostraße 5 | 85649 Hofolding | Deutschland | www.ettinger.de | info@ettinger.de | + 49 8104 66 23 88