Article datasheet

IEC Connector PC Flange Rear Mount Inlet

Article-No.: 039.61.199

Manufacturer: Qualtek

Manufacturer article-no.: 703W-00/54

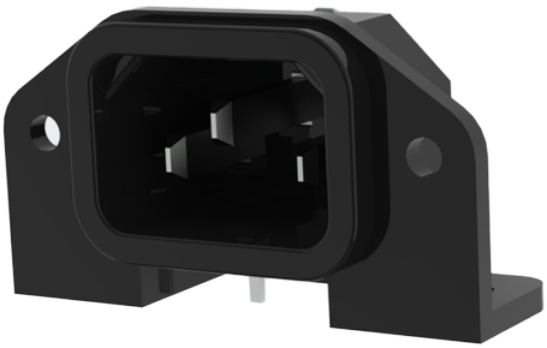

Image may be similar

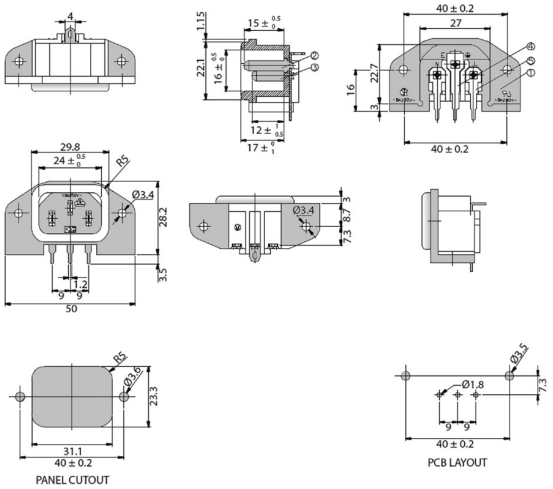

Amperage [A]:	10
Color:	Black
Model:	Plug, Screw/PCB Mounting
Weight:	14.7g
Conformities:	Reach COMPLIANT, RoHS COMPLIANT, SVHC COMPLIANT

You can find all information on the web on our article detail page
IEC Connector PC Flange Rear Mount Inlet

Would you like individual advice?
We look forward to your email to products@ettinger.de.

Subject to change and errors.

ETTINGER GmbH

Ottostraße 5 | 85649 Hofolding | Deutschland | www.ettinger.de | info@ettinger.de | + 49 8104 66 23 88