Article datasheet

Cable Tie 2.5x99mm for outdoor application

Article-No.: 072.53.210

Manufacturer: Panduit

Manufacturer article-no.: PLT1M-M100



Image may be similar

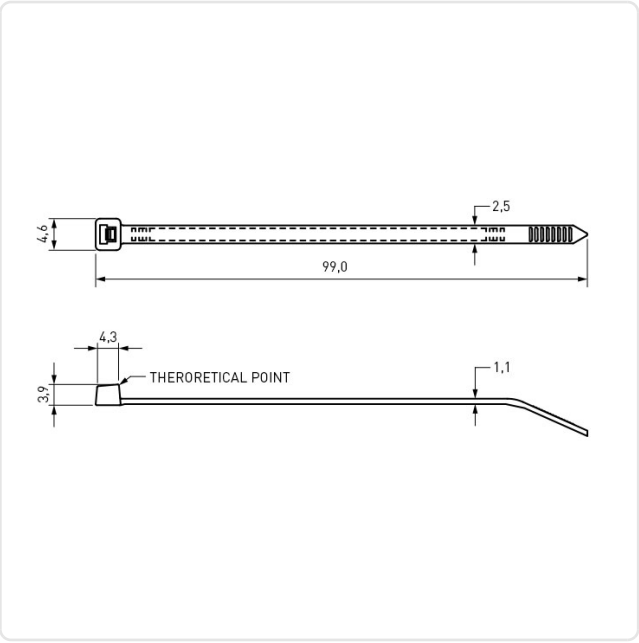

Bundle Diameter [mm]:	21,0-50,0
Color:	Black
Flammability Class:	UL94-HB
Length [mm]:	99
Material:	PP - Polypropylene
Model:	UV-Stabilized
Width [mm]:	2.5
Weight:	0.28g

Conformities

RoHS compliant:	Yes
REACH compliant:	Yes
SVHC free:	Yes

Note: Information on SVHC substances specific to your individual deliveries can be found on your respective delivery note.

You can find all information on the web on our article detail page [Cable Tie 2.5x99mm for outdoor application]

Would you like individual advice?
We look forward to your email to products@ettinger.de.

Subject to change and errors.

ETTINGER GmbH

Ottostraße 5 | 85649 Hofolding | Deutschland | www.ettinger.de | info@ettinger.de | + 49 8104 66 23 88