Article datasheet

Solder Terminal Pin ø1.3x13.5mm Brass gold-plated square press-in

Article-No.: 013.14.434



Image may be similar

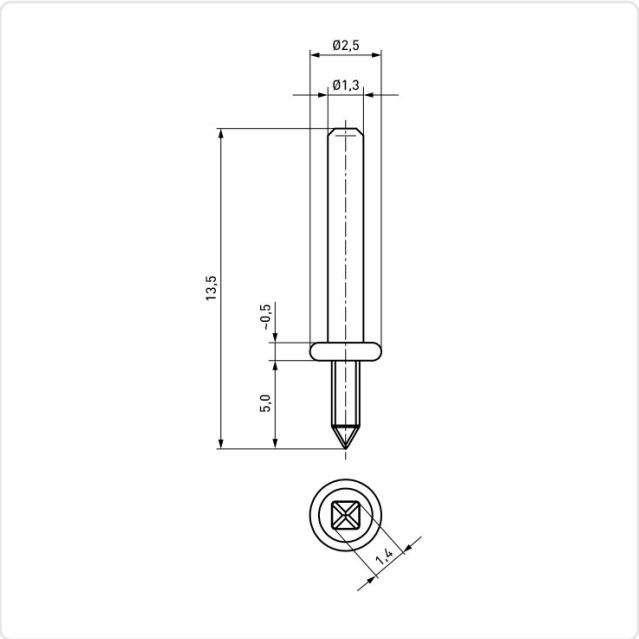

Diameter [mm]:	1.3
Finish:	Gold-Plated
Length [mm]:	13.5
Material:	Brass CW508L / CuZn37, lead-free
PCB Hole Ø [mm]:	1.3
Plug-In Length [mm]:	8
Weight:	0.16g

Conformities

RoHS compliant:	Yes
REACH compliant:	Yes
SVHC free:	Yes

Note: Information on SVHC substances specific to your individual deliveries can be found on your respective delivery note.

You can find all information on the web on our article detail page
Solder Terminal Pin ø1.3x13.5mm Brass gold-plated square press-in

Would you like individual advice?
We look forward to your email to products@ettinger.de.

Subject to change and errors.

ETTINGER GmbH
Ottostraße 5 | 85649 Hofolding | Deutschland | www.ettinger.de | info@ettinger.de | + 49 8104 66 23 88