Article datasheet

Countersunk Screw ISO14581 M5x20 A2 Plain Stainless Steel Torx

Article-No.: 001.55.572



Image may be similar

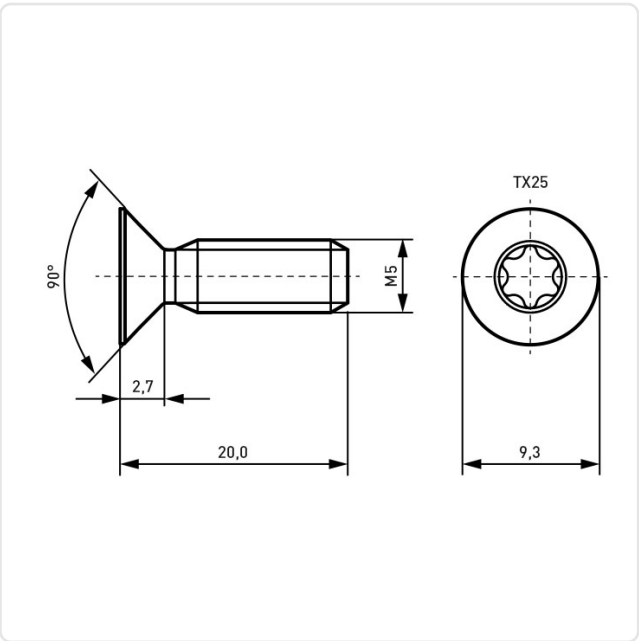

Actuator Size:	Torx T25
DIN/ISO:	ISO14581
Drive Type:	TORX
Finish:	Plain
Head Diameter [mm]:	9.3
Head Height [mm]:	2.7
Head Shape:	Countersunk Head
Length [mm]:	20
Material:	Stainless Steel AISI 304 / A2
Thread Size:	M5
Weight:	2.7g

Conformities

RoHS compliant:	Yes
REACH compliant:	Yes
SVHC free:	Yes

Note: Information on SVHC substances specific to your individual deliveries can be found on your respective delivery note.

You can find all information on the web on our article detail page
Countersunk Screw ISO14581 M5x20 A2 Plain Stainless Steel Torx

Would you like individual advice?
We look forward to your email to products@ettinger.de.

Subject to change and errors.

ETTINGER GmbH

Ottostraße 5 | 85649 Hofolding | Deutschland | www.ettinger.de | info@ettinger.de | + 49 8104 66 23 88