Article datasheet

SEMS Screw ISO7045 PZ Z4-1 M5x10 ZN Plated ST 4.8 WSHR + Spring Lock WSHR

Article-No.: 081.58.546

Image may be similar

Actuator Size:	Pozidriv PZ2
Combination:	Washer DIN6902-1 and Spring Lock Washer DIN6905
DIN/ISO:	ISO7045
Drive Type:	Cross Recess / Pozidriv-Z
Finish:	Galvanized, Blue, 5 µm, A2K
Head Diameter [mm]:	10
Head Height [mm]:	3.8
Head Shape:	Pan Head
Length [mm]:	10
Material:	Steel 4.8, lead-free
Material Group:	Steel
Thread Size:	M5
Weight:	3.54g
Conformities:	Reach COMPLIANT, RoHS COMPLIANT, SVHC COMPLIANT

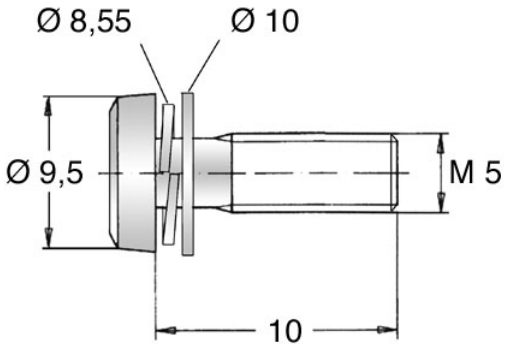

You can find all information on the web on our article detail page
SEMS Screw ISO7045 PZ Z4-1 M5x10 ZN Plated ST 4.8 WSHR + Spring Lock WSHR

Would you like individual advice?
We look forward to your email to products@ettinger.de.

Subject to change and errors.

ETTINGER GmbH

Ottostraße 5 | 85649 Hofolding | Deutschland | www.ettinger.de | info@ettinger.de | + 49 8104 66 23 88