ETTINGER
Elektronik-Bauelemente

Article datasheet

# Solder Terminal Pin ø1.3x11.0mm Brass silver-plated - square press-in

**Article-No.: 013.14.419**

**Image may be similar**

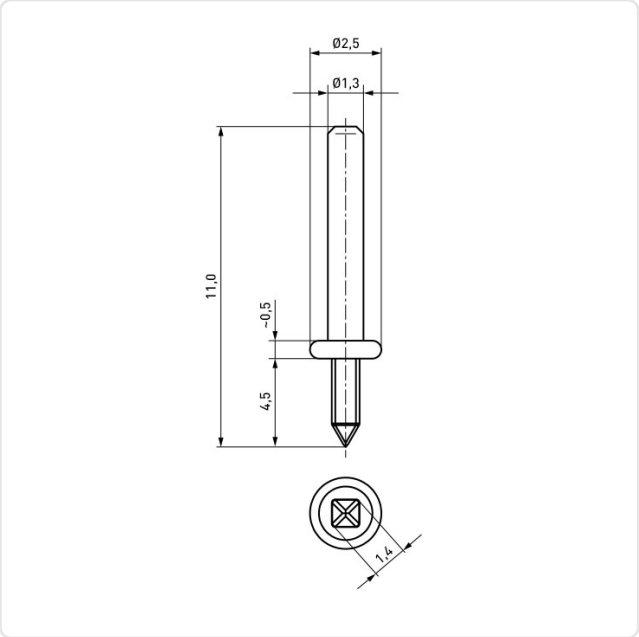


| | |
|---|---|
| Diameter [mm]: | 1.3 |
| Finish: | Silver-Plated |
| Length [mm]: | 11 |
| Material: | Messing |
| PCB Hole Ø [mm]: | 1.3 |
| Plug-In Length [mm]: | 6 |
| Weight: | 0.13g |
| Conformities: | Reach COMPLIANT, RoHS COMPLIANT, SVHC COMPLIANT |

**You can find all information on the web on our article detail page**

**Would you like individual advice?**
**We look forward to your email to products@ettinger.de.**

**Subject to change and errors.**

**ETTINGER GmbH**

Ottostraße 5 | 85649 Hofolding | Deutschland | www.ettinger.de | info@ettinger.de | + 49 8104 66 23 88