Article datasheet

Equipment-handle made of alu-tube Handle shanks made of high-duty PA

Article-No.: 029.51.308



Image may be similar

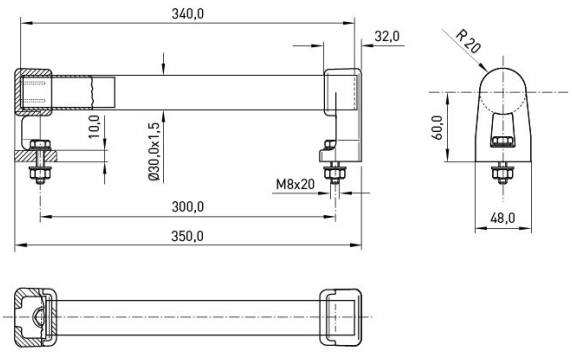

Dist. Mounting Holes [mm]:	300
Finish:	Anodized, Clear
Height [mm]:	60
Material:	Aluminum ENAW-5754 / AlMg3, lead-free
Model:	Equipment Handle
Thread Size:	M8
Width [mm]:	30
Weight:	317g

Conformities

RoHS compliant:	Yes
REACH compliant:	Yes
SVHC free:	Yes

Note: Information on SVHC substances specific to your individual deliveries can be found on your respective delivery note.

You can find all information on the web on our article detail page
Equipment-handle made of alu-tube Handle shanks made of high-duty PA

Would you like individual advice?
We look forward to your email to products@ettinger.de.

Subject to change and errors.

ETTINGER GmbH

Ottostraße 5 | 85649 Hofolding | Deutschland | www.ettinger.de | info@ettinger.de | + 49 8104 66 23 88