Article datasheet

Split Washer DIN127 B Ø2.6/5.1 x 0.6 Zinc Plated Spring Steel

Article-No.: 003.63.021



Image may be similar

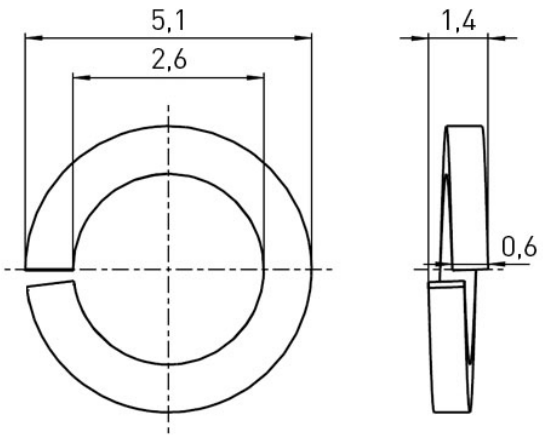

DIN/ISO:	DIN127B
Finish:	Zinc Plated, 5 µm, A2K
For Thread Size:	M2.5
Height [mm]:	0.6
Inner Diameter [mm]:	2.6
Material:	Spring Steel, lead-free
Outer Diameter [mm]:	5.1
Weight:	0.06g

Conformities

RoHS compliant:	Yes
REACH compliant:	Yes
SVHC free:	Yes

Note: Information on SVHC substances specific to your individual deliveries can be found on your respective delivery note.

You can find all information on the web on our article detail page
Split Washer DIN127 B Ø2.6/5.1 x 0.6 Zinc Plated Spring Steel

Would you like individual advice?
We look forward to your email to products@ettinger.de.

Subject to change and errors.

ETTINGER GmbH
Ottostraße 5 | 85649 Hofolding | Deutschland | www.ettinger.de | info@ettinger.de | + 49 8104 66 23 88