ETTINGER
Elektronik-Bauelemente

Article datasheet

TOP-Marker Type PIN for TOP-Turning Knob

Article-No.: 053.01.003

Manufacturer: OKW Gehäusesysteme

Manufacturer article-no.: A1101003

OKW GEHÄUSE SYSTEME

Image may be similar

Material:	PA 6.0
Material Group:	Plastic
Model:	Marker for TOP Knob
Conformities:	Reach COMPLIANT, RoHS COMPLIANT, SVHC COMPLIANT

You can find all information on the web on our article detail page

Would you like individual advice?
We look forward to your email to products@ettinger.de.

Subject to change and errors.

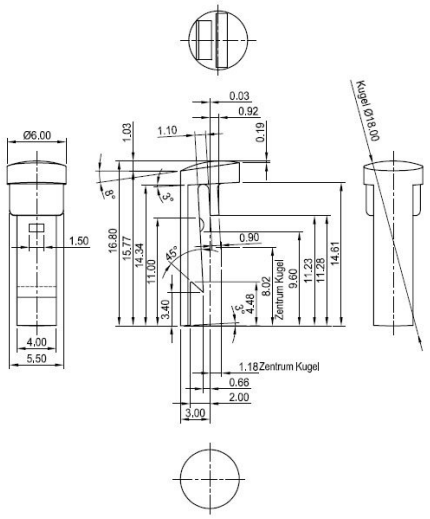

ETTINGER GmbH

Ottostraße 5 | 85649 Hofolding | Deutschland | www.ettinger.de | info@ettinger.de | + 49 8104 66 23 88