Article datasheet

Round Spacer Ø5.2/10.0 x 12.0 PA/GF black | with Lug Ø5.3 x 3.5

Article-No.: 005.96.712

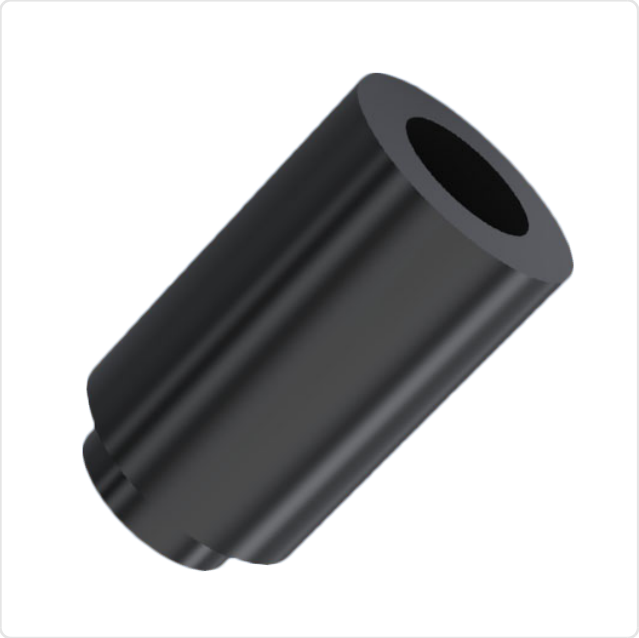

Image may be similar

Color:	Black
Flammability Class:	UL94-HB
For Thread Size:	M4
Inner Diameter [mm]:	5.2
Length [mm]:	12
Lug Diameter [mm]:	5.3
Lug Length [mm]:	3.5
Material:	PA 6.0 25% GF
Material Group:	Plastic
Outer Diameter [mm]:	10
Weight:	0.7g
Conformities:	Reach COMPLIANT, RoHS COMPLIANT, SVHC COMPLIANT

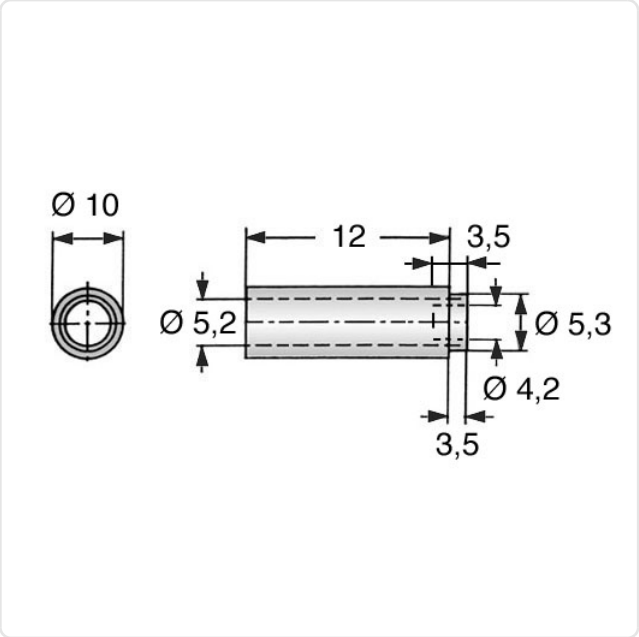

You can find all information on the web on our article detail page
Round Spacer Ø5.2/10.0 x 12.0 PA/GF black | with Lug Ø5.3 x 3.5

Would you like individual advice?
We look forward to your email to products@ettinger.de.

Subject to change and errors.

ETTINGER GmbH

Ottostraße 5 | 85649 Hofolding | Deutschland | www.ettinger.de | info@ettinger.de | + 49 8104 66 23 88