ETTINGER
Elektronik-Bauelemente

Article datasheet

Fan mount for fan-hole ø3.2-4.5mm Silicon 40 Shore A,black RMS-316

Article-No.: 057.90.100

Image may be similar

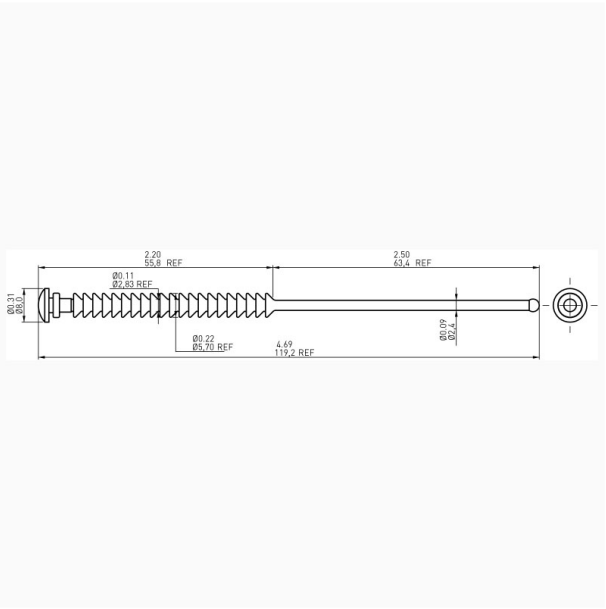

Color:	Black
Material:	Silicone
Material Group:	Kunststoff
Model:	Quick Fastener
Weight:	0.53g
Conformities:	Reach COMPLIANT, RoHS COMPLIANT, SVHC COMPLIANT

You can find all information on the web on our article detail page

Would you like individual advice?
We look forward to your email to products@ettinger.de.

Subject to change and errors.

ETTINGER GmbH

Ottostraße 5 | 85649 Hofolding | Deutschland | www.ettinger.de | info@ettinger.de | + 49 8104 66 23 88