ETTINGER
Elektronik-Bauelemente

Article datasheet

TOP-Marker for TOP-Knob Type PIN

Article-No.: 053.01.006

Manufacturer: OKW Gehäusesysteme

Manufacturer article-no.: A1101006

Image may be similar

Color:	Blue
Material:	PA 6.0
Material Group:	Plastic
Model:	Marker for TOP Knob
Weight:	0.2g
Conformities:	Reach COMPLIANT, RoHS COMPLIANT, SVHC COMPLIANT

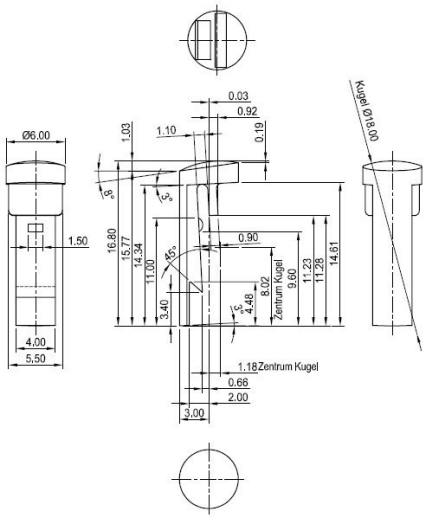

You can find all information on the web on our article detail page

Would you like individual advice?
We look forward to your email to products@ettinger.de.

Subject to change and errors.

ETTINGER GmbH

Ottostraße 5 | 85649 Hofolding | Deutschland | www.ettinger.de | info@ettinger.de | + 49 8104 66 23 88