ETTINGER
Elektronik-Bauelemente

Data Sheet

Circuit Board Support PS 9.5mm Polyamid 6.6,natural UL94-V2 E70062

Part No.: 006.13.096

Image for illustrative purposes only.

Length [mm] :	9,5
Flammability Class :	UL94-V2
Material :	PA 6.6 UL94 V-2 E 70062 / RMS01
Material Group :	Plastic
Color :	Natural
PCB Thickness [mm] :	1,6
Mounting :	Locking and Support Fastening
Panel Hole Ø [mm] :	4,8
Weight per 100 pcs :	43 g
Customs tariff number :	39269097
Conformities :	RoHS COMPLIANT, Reach COMPLIANT, SVHC COMPLIANT

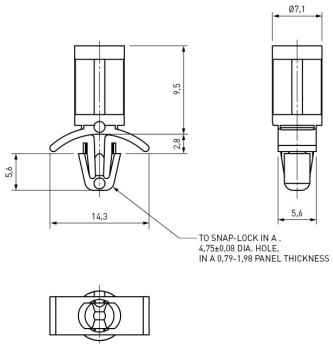

All information is available online on our detail product page!

Looking for some advice for your specific situation?
If so, please don't hesitate to e-mail us at products@ettinger.de

Subject to changes and errors.

ETTINGER GmbH Ottostraße 5 85649 Hofolding Germany www.ettinger.de
Phone: + 49 8104 662388 Fax: + 49 8104 662399 E-mail: info@ettinger.de