ETTINGER
Elektronik-Bauelemente

Data Sheet

Mounting Set UNC 4-40 complete set UNC 5/8 Steel zinc pl.

Part No.: 085.17.459

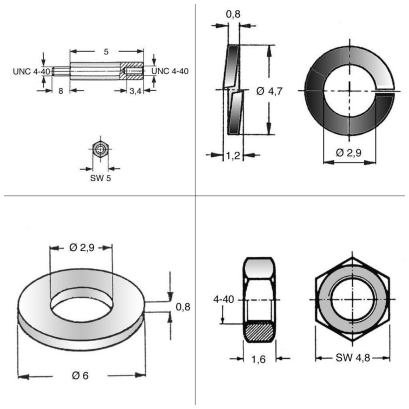

Material :	Steel
Length [mm] :	8
Special Features :	0040517454A.BOLZEN
Material Group :	Steel
Thread Size :	UNC4-40
Weight per 100 pcs :	355 g
Customs tariff number :	73181558
Conformities :	RoHS COMPLIANT, Reach COMPLIANT, SVHC COMPLIANT

All information is available online on our detail product page!

Looking for some advice for your specific situation?
If so, please don't hesitate to e-mail us at products@ettinger.de

Subject to changes and errors.

ETTINGER GmbH Ottostraße 5 85649 Hofolding Germany www.ettinger.de
Phone: + 49 8104 662388 Fax: + 49 8104 662399 E-mail: info@ettinger.de