ETTINGER
Elektronik-Bauelemente

Data Sheet

IEC Power Inlets Twin Fused 5x20mm PC Flange Mount/250V 10A

Part No.: 039.74.692

Image for illustrative purposes only.

Color :	Black
Amperage [A] :	10
Special Features :	PC Flansch mount
Fuse Size [mm] :	5.0x20.0
Model :	Plug, Screw/PCB Mounting
Weight per 100 pcs :	1850 g
Customs tariff number :	85366990
Conformities :	RoHS COMPLIANT, Reach COMPLIANT, Reach COMPLIANT, SVHC COMPLIANT

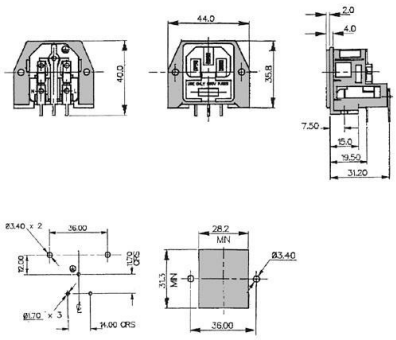

All information is available online on our detail product page!

Looking for some advice for your specific situation?
If so, please don't hesitate to e-mail us at products@ettinger.de

Subject to changes and errors.

ETTINGER GmbH Ottostraße 5 85649 Hofolding Germany www.ettinger.de
Phone: + 49 8104 662388 Fax: + 49 8104 662399 E-mail: info@ettinger.de