ETTINGER
Elektronik-Bauelemente

Data Sheet

Collapsible Handle 130x91x20mm Alu,pure untreated/not assembled

Part No.: 029.01.081

Image for illustrative purposes only.

Finish :	Plain
Height [mm] :	91
Special Features :	Carrying capacity 1250 N/Pair
Material Group :	Aluminum
Material :	Aluminum EN AW-6060
Width [mm] :	130
Dist. Mounting Holes [mm] :	118
Model :	Collapsible Handle
Weight per 100 pcs :	17660 g
Customs tariff number :	73269098
Conformities :	RoHS COMPLIANT, Reach COMPLIANT, SVHC COMPLIANT

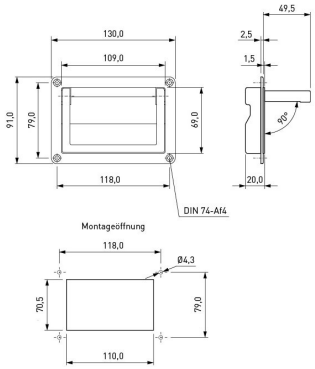

All information is available online on our detail product page!

Looking for some advice for your specific situation?
If so, please don't hesitate to e-mail us at products@ettinger.de

Subject to changes and errors.

ETTINGER GmbH Ottostraße 5 85649 Hofolding Germany www.ettinger.de
Phone: + 49 8104 662388 Fax: + 49 8104 662399 E-mail: info@ettinger.de