ETTINGER
Elektronik-Bauelemente

Data Sheet

Power-Element M4/8-pole Brass,tinned max.10Amps/pin 3,5mm

Part No.: 013.45.442

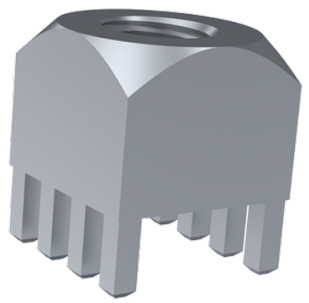

Image for illustrative purposes only.

Finish :	Tin-Plated
Material :	Brass
Grid [mm] :	2.54
PCB Hole Ø [mm] :	1,65
Special Features :	thread uncontinuous
Material Group :	Brass
Thread Size :	M4
Amperage [A] :	80
Weight per 100 pcs :	440 g
Customs tariff number :	74153900
Conformities :	RoHS COMPLIANT, RoHS COMPLIANT, Reach NOT COMPLIANT, SVHC NOT COMPLIANT

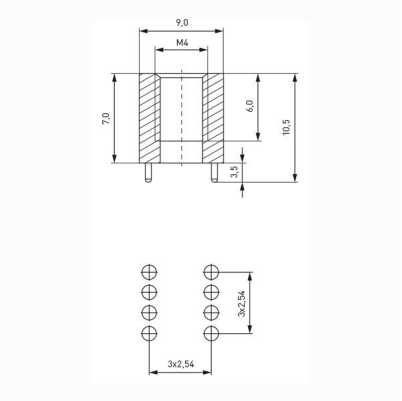

All information is available online on our detail product page!

Looking for some advice for your specific situation?
If so, please don't hesitate to e-mail us at products@ettinger.de

Subject to changes and errors.

ETTINGER GmbH Ottostraße 5 85649 Hofolding Germany www.ettinger.de
Phone: + 49 8104 662388 Fax: + 49 8104 662399 E-mail: info@ettinger.de