ETTINGER
Elektronik-Bauelemente

Data Sheet

Power-Element M4 max. 50Amps Brass tin-plated

Part No.: 013.40.644

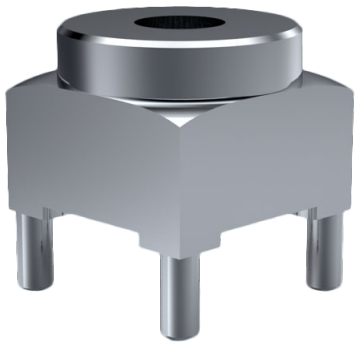

Image for illustrative purposes only.

Finish :	Tin-Plated
Material :	Brass
Amperage [A] :	50
Grid [mm] :	7.62
PCB Hole Ø [mm] :	1,8
Special Features :	PCB thickness: 1.5 - 3.2 mm
Material Group :	Brass
Thread Size :	M4
Weight per 100 pcs :	361 g
Customs tariff number :	85366930
Conformities :	RoHS COMPLIANT, RoHS COMPLIANT, Reach COMPLIANT, SVHC COMPLIANT

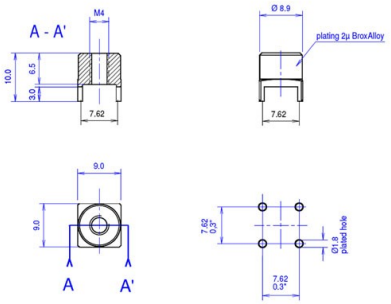

All information is available online on our detail product page!

Looking for some advice for your specific situation?
If so, please don’t hesitate to e-mail us at products@ettinger.de

Subject to changes and errors.

ETTINGER GmbH Ottostraße 5 85649 Hofolding Germany www.ettinger.de
Phone: + 49 8104 662388 Fax: + 49 8104 662399 E-mail: info@ettinger.de